STAR WARS™

www.starwars.com

© & ™ Lucasfilm Ltd.

Metal Earth®

3D METAL MODEL KITS

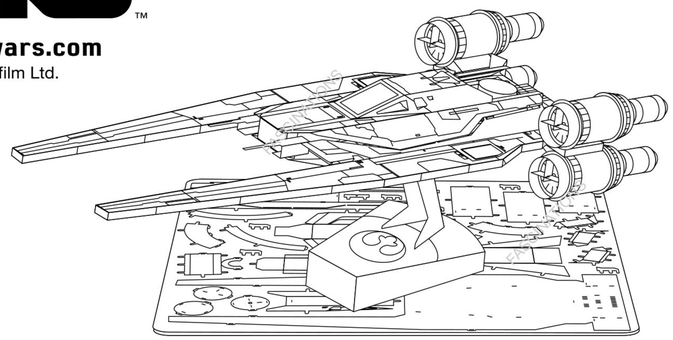

U-wing Fighter™

Item No. MMS272

360° view

It is highly recommended that you visit
www.metalearth.com/360/mms272
to see the completed model before assembling your own

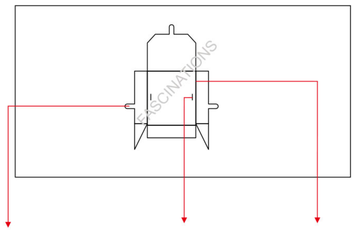

Insertion tabs are inserted and then folded

Insertion holes

Fold lines can be seen as shown here

Legends:

- E — Engraved side
- NE — Non-engraved side
- Attention point
- Insert tab and bend 90 degrees
- Insert tab and twist 90 degrees

Assembly tip:

If needed, slightly twist tabs to hold parts together then untwist and bend them down for a nice finish

Recommended tools:

-Wire cutters: helpful for taking parts from the metal sheets.

-Tweezers or needle nose pliers: helpful for folding parts, bending and twisting tabs.

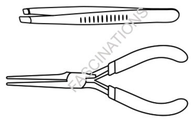

Metal sheets

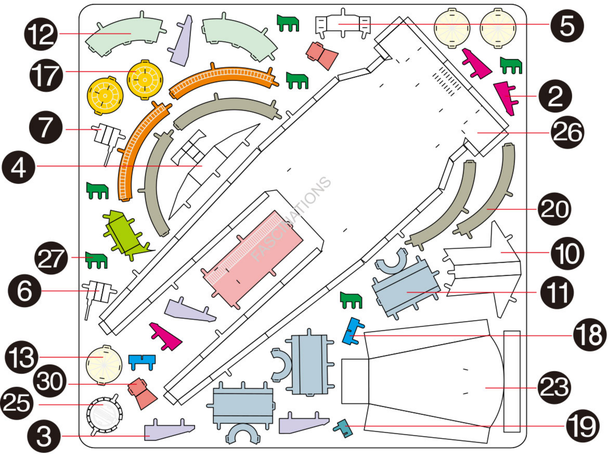

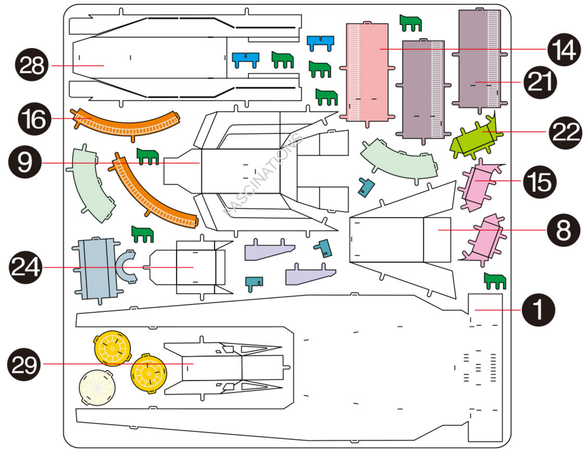

In order to avoid possible injury from sharp edges, please carefully discard the metal sheets after parts have been removed

Assembly Flow Chart

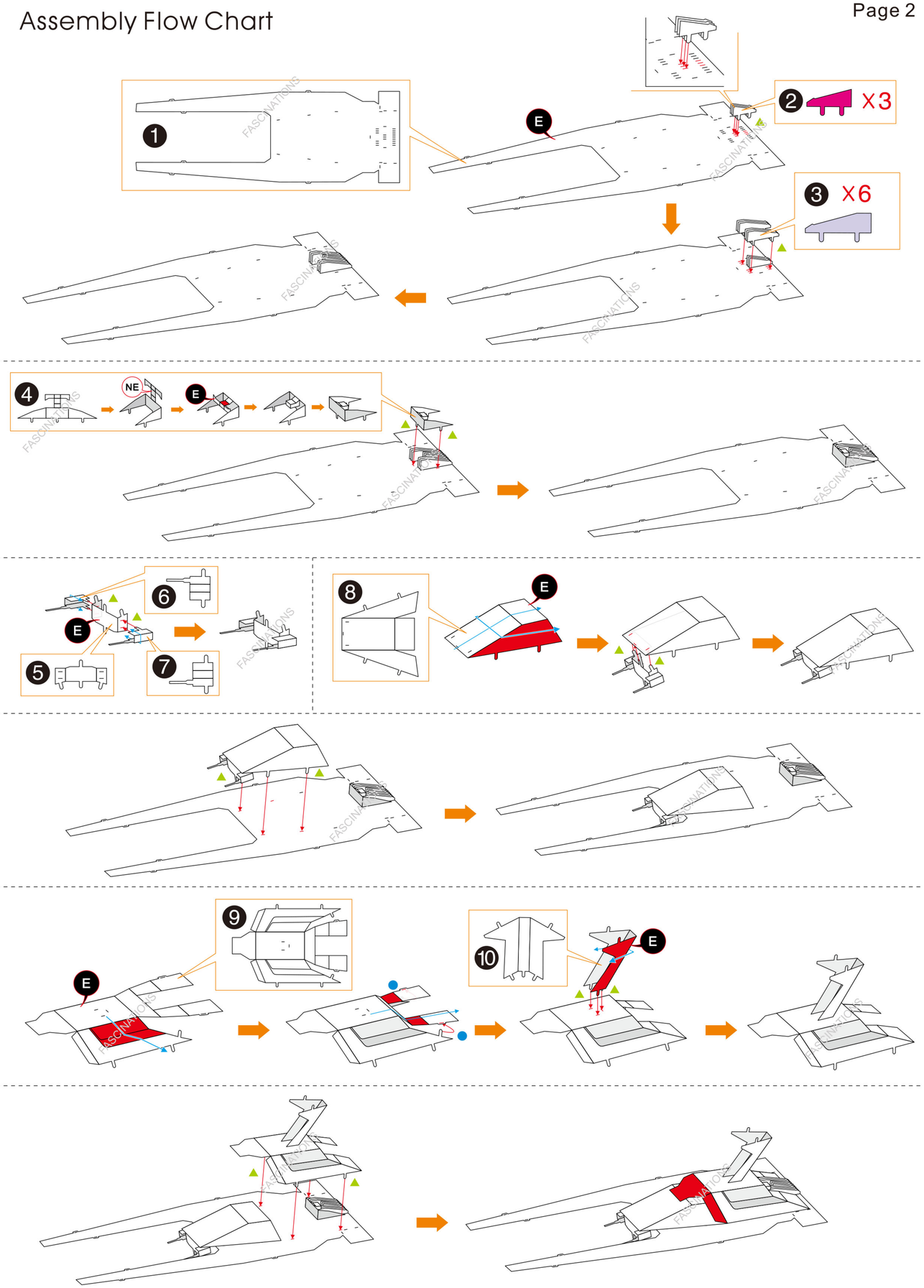

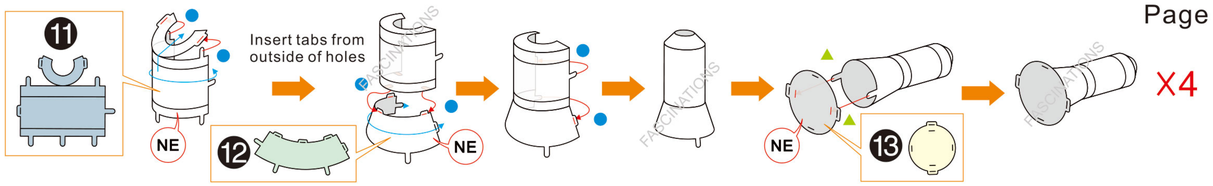

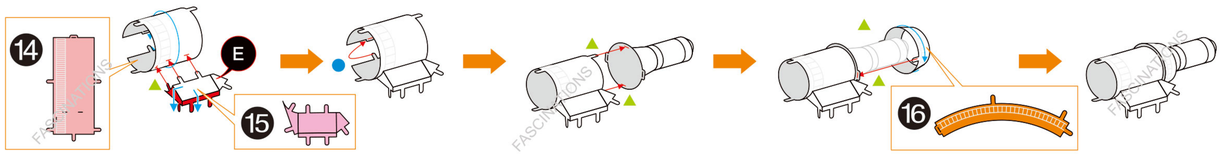

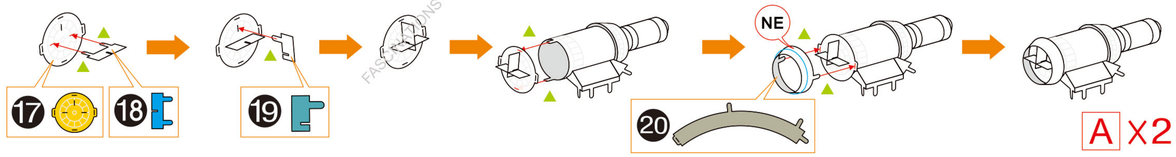

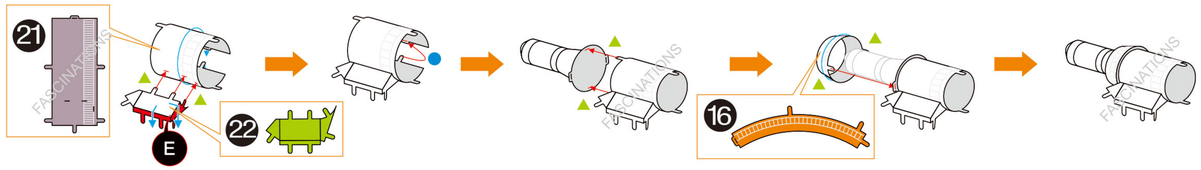

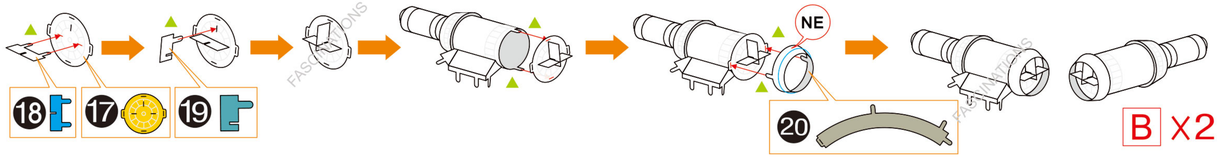

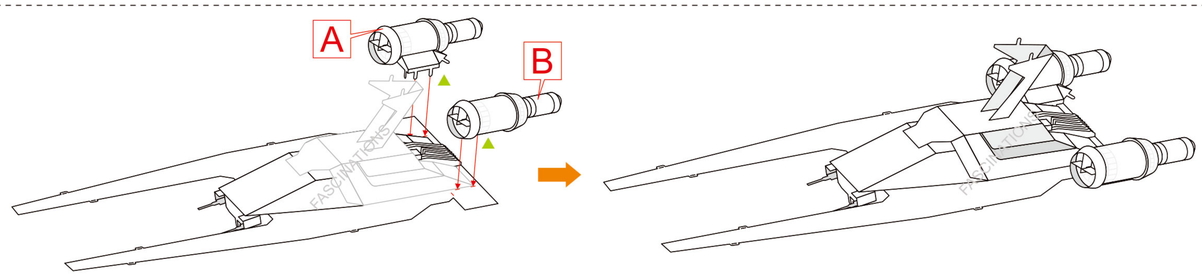

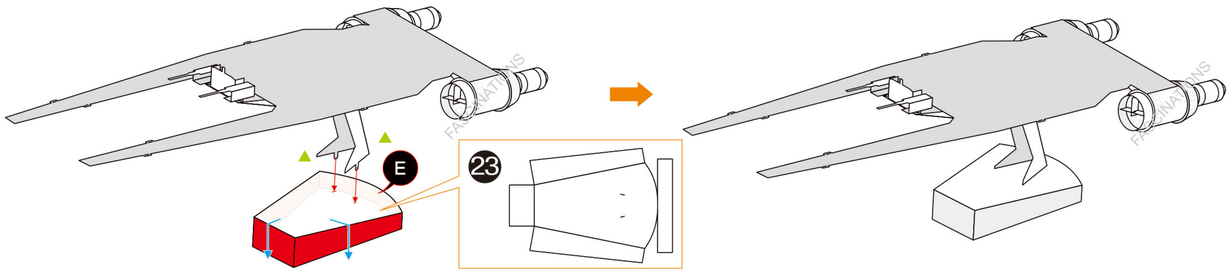

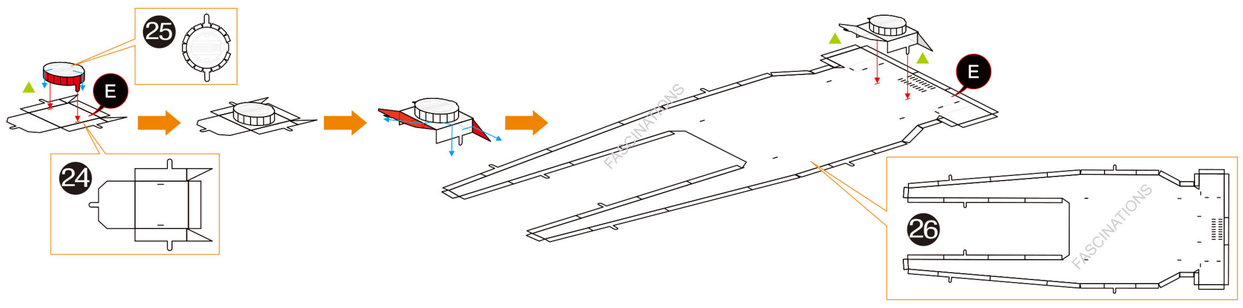

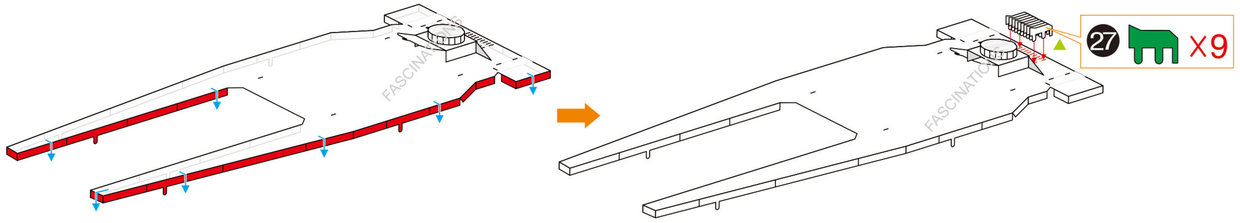

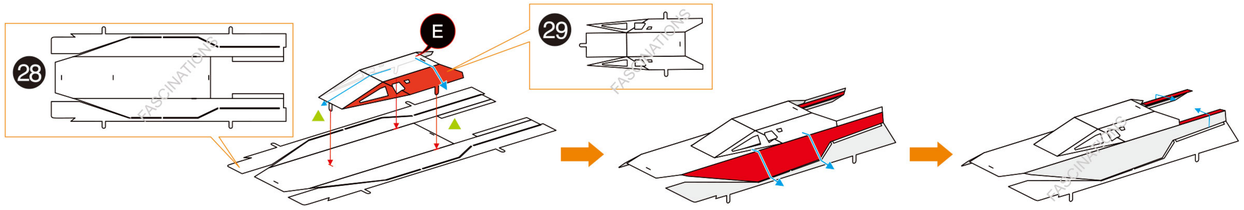

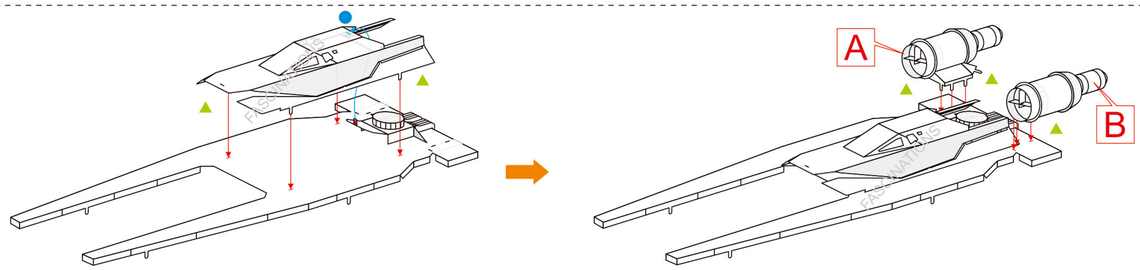

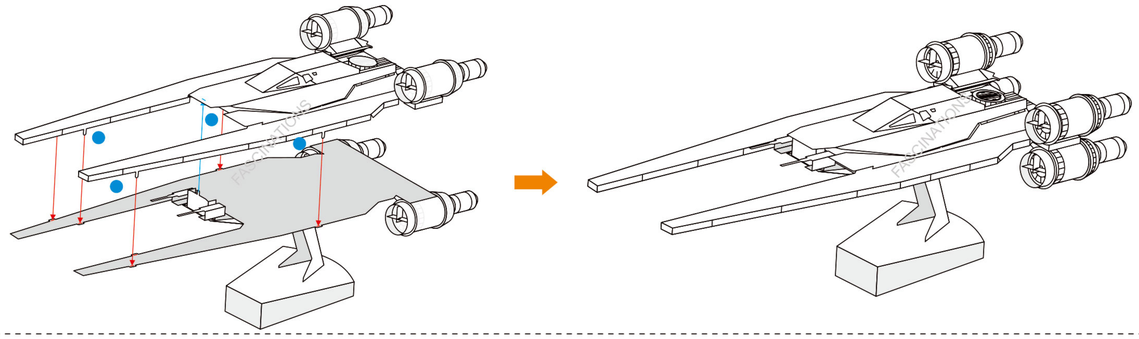

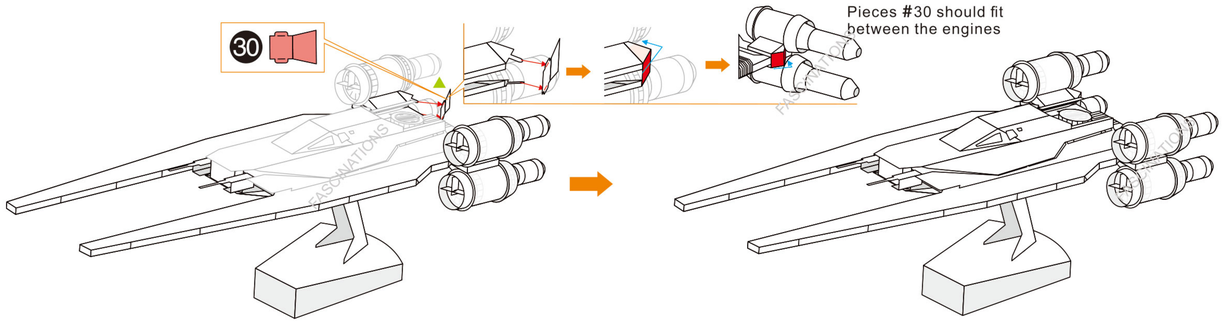

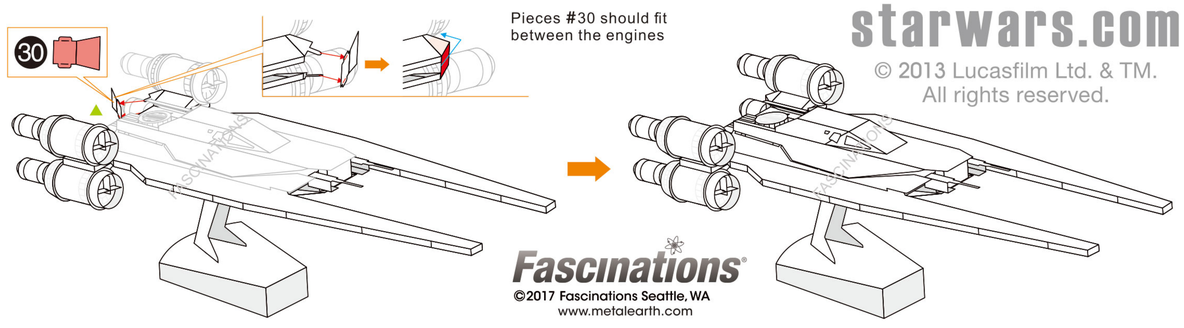

starwars.com
© 2013 Lucasfilm Ltd. & TM.
All rights reserved.

Fascinations®
©2017 Fascinations Seattle, WA
www.metalearth.com